RODAVIGO, S.A.
RODAMIENTOS VIGO, S.A.
www.rodavigo.net
+34 986 288118
Servicio de Att. al Cliente

The Drive & Control Company

Rexroth
Bosch Group

# Pneumatic Solutions for Small Handling

Polígono Indutrial O Rebullón s/n. 36416 - Mos - España - rodavigo@rodavigo.com

RODAVIGO, S.A.
RODAMIENTOS VIGO, S.A.
www.rodavigo.net
+34 986 288118
Servicio de Att. al Cliente

**Innovative and future-oriented – small handling with pneumatics**

With the increasing miniaturization of components, workpieces, and products, the tasks of handling technology are becoming more and more demanding. Applications are more complex; completely new fields are emerging. Future-forward product concepts are in demand. Even more compact, more powerful, more flexible, and more precise – these are qualities that count. Innovative small handling components from Rexroth.

Polígono Indutrial O Rebullón s/n. 36416 - Mos - España - rodavigo@rodavigo.com

RODAVIGO, S.A.
RODAMIENTOS VIGO, S.A.
www.rodavigo.net
+34 986 288118
Servicio de Att. al Cliente



# Take advantage of our experience in handling technology for your automation tasks

Gripping, rotating, driving, controlling – for your production process to operate at maximum efficiency, all parts, along with their individual functions, have to be linked together precisely. Our global application experience helps us optimize your handling tasks.

**Application-specific pneumatic solutions**
From single components to ready-to-assemble handling modules, our products are specifically designed for the requirements of assembly and handling technology. Based on a well-matched product range and specific configuration tools and calculation software, we can always provide solutions that are perfectly tailored to our customers' applications. Whether you need secure gripping, precise positioning of objects and workpieces, or exact control of actuators – it's the details that matter.

- Best in class pneumatic solutions
- Advanced engineering tools
- Industry-specific product portfolio

Together with our customers, we have developed a broad product portfolio tailored to meet the needs of the industry. The result? Products, systems, and solutions that are best in class in all respects and exactly fit your purpose. Talk to one of our industry experts available throughout the world.

**04 Pneumatics in small handling**
05 Advantages of pneumatics
06 Functions and components
07 Handling systems

**08 Products and components**
08 Gripping systems
10 Rotary actuators
12 Linear drives
16 Valve technology

**18 Engineering**
18 Easy-2-Combine
20 Configuration, online tools
21 Product calculation system

**22 Consulting and service**
22 Customer-specific solutions

Polígono Indutrial O Rebullón s/n. 36416 - Mos - España - rodavigo@rodavigo.com

RODAVIGO, S.A.
RODAMIENTOS VIGO, S.A.
www.rodavigo.net
+34 986 288118
Servicio de Att. al Cliente

- **Non-contact gripping – NCT-PK for the food industry**

- **Precise and fast – pick & place in circuit board manufacturing**

- **Vacuum gripper modules – for molded components in plastics processing**

**"Best in class" in many industries and applications**
Precision, speed, flexibility, compact dimensions, easy assembly, reliability, cost-effectiveness – pneumatics from Rexroth stand for superior handling technology. We offer the right solution for virtually every conceivable small handling function. Many automated tasks would not even be possible without our current spectrum of innovative pneumatic solutions.

**Cross-technology handling systems**
Pneumatics can be optimally combined with other drive technologies. The individual advantages of specific drive technologies can come together to form an optimum overall solution, in terms of both function and economics. Rexroth provides intelligently matched products for linear and rotary movements, controls, and gripping functions.

**Formula 1 x 1 x 1 + 5: pneumatics in small handling**
The trend toward smaller workpieces and increasingly delicate automation technology means that the number of tasks in small handling, a subset of assembly and handling technology, is growing almost daily. More and more applications fall within our defined working range of 1 x 1 x 1 m, with workpieces up to 5 kg. We respond with pneumatic concepts consistently geared towards the special requirements of this segment.

Polígono Indutrial O Rebullón s/n. 36416 - Mos - España - rodavigo@rodavigo.com

RODAVIGO, S.A.
RODAMIENTOS VIGO, S.A.
www.rodavigo.net
+34 986 288118
Servicio de Att. al Cliente



# Small handling – the perfect showcase for pneumatics

**The right drive technology in automation**
Automated movements in small handling are accomplished by electric and pneumatic drives. The right drive technology for an application should be chosen based on its specific strengths. Because Rexroth covers the entire drive and control spectrum, users can receive neutral technology advice and handling solutions that are an optimum mix of multiple technologies.

**Strengths: electric and pneumatic drives (parameters)**

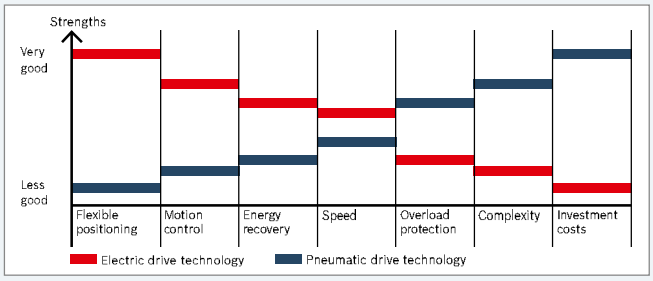


**Pneumatic drives**
"Pneumatics have nimble fingers." They are used primarily when small masses need to be set in motion at high speeds across short distances.

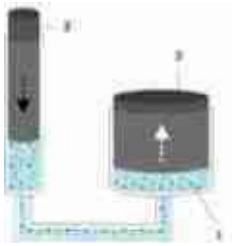

Air is converted to compressed air by compressors and the stored energy is converted to mechanical energy or "work" by cylinders, drives, or other consumers. Air (1) is pressurized in a compressor (2) and moves a working piston (3).

**Electrical drives**
"Electrics have precise hands": high flexibility, controlled movements. Various electric motors are available: DC motors, synchronous motors, and asynchronous motors.

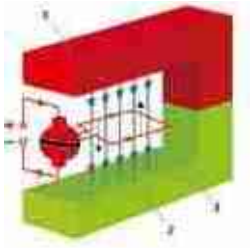

Electric energy is transformed into energy for mechanical motion. Two magnetic fields work together to generate a torque. A stationary magnet (1) (stator) generates a magnetic field (2). The force of this field sets a current carrying coil (3) (rotor) into motion.

**Cost-effectiveness and energy efficiency**
Low masses, short paths, high speeds – the preferred application areas of pneumatics are nearly identical to the requirements of small handling. This makes pneumatic system solutions ideal. The components are reliable, operationally safe, and low-maintenance, and guarantee a long service life. Moreover, optimum dimensioning and energy efficient configuration reduce compressed air consumption to a minimum.

**The advantages of pneumatics for small handling at a glance:**

- Compact design and miniaturized components
- Low moving masses and minimal installation space
- Easy control
- Fast reaction times and high speeds for shorter process times
- Simple, robust component construction
- Reliable, low-maintenance, and durable technology
- High energy density
- Clean, harmless, and safe medium

By factoring in relevant parameters, pneumatic components can also demonstrate their full potential when it comes to system and maintenance costs, temperature resistance, and overload protection.

Polígono Indutrial O Rebullón s/n. 36416 - Mos - España - rodavigo@rodavigo.com

# Optimal pneumatic solutions with the right components

All components are perfectly matched, down to the very last detail, and can be configured to create optimal pneumatic solutions. Thanks to a consistent product philosophy, all elements can be easily combined, including our pneumatic control components.

**Grip**
Pneumatic vacuum gripping, mechanical or non-contact

**Rotate**
Pneumatic rotary modules for rotary movements

**Drive**
Pneumatic cylinders and guide units for linear movements

**Control**
Pneumatic control with single valves and modular valve systems

RODAVIGO, S.A.
RODAMIENTOS VIGO, S.A.
www.rodavigo.net
+34 986 288118
Servicio de Att. al Cliente



# Because complex doesn't have to be complicated – small handling with the Easy-2-Combine interface

**Standardized handling systems made easy**
The Easy-2-Combine interface has been developed for applications such as pick & place or linear and area gantries. Thanks to its direct mounting system, small handling components can be combined into complete handling systems easily, quickly, and cost-effectively. For our grippers, rotary modules, and linear drives, the standardized mechanical Easy-2-Combine interface enables interlocking connections without adapter plates.

This not only simplifies configuration, it also optimizes dynamics and efficiency by reducing moving mass.

- Reduced configuration time, lower assembly costs
- Highly flexible assembly
- Optimum compatibility with all components
- Modular design, wide product spectrum

**Easy-2-Combine**

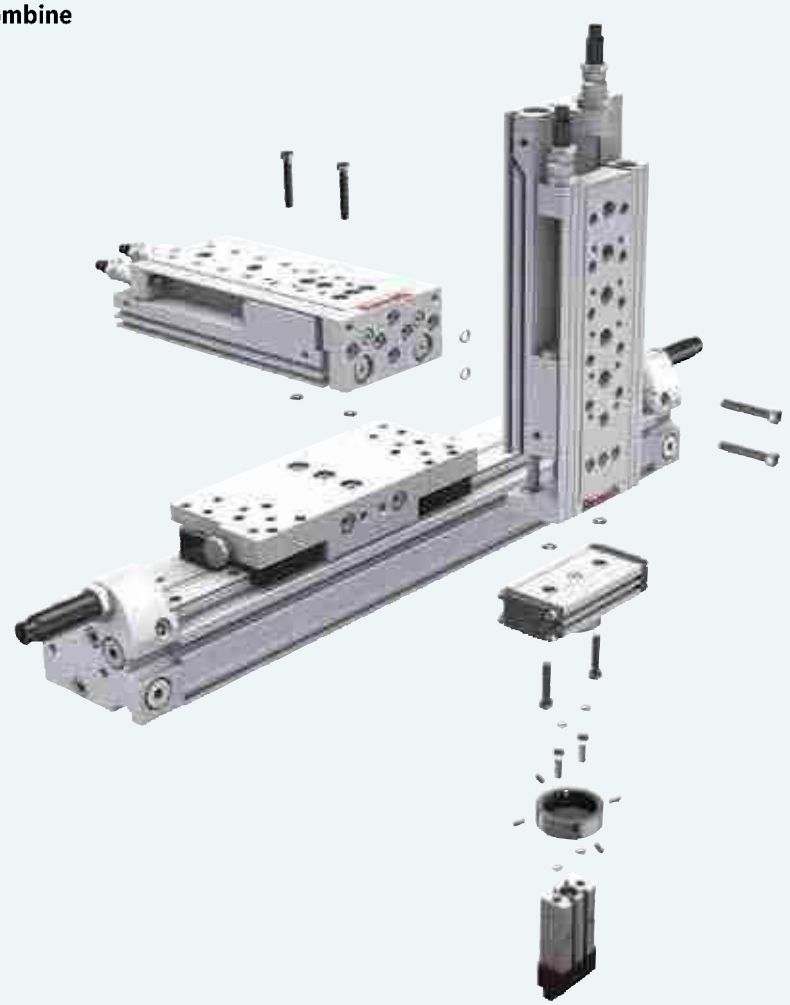

**Pick & place**
Capable of two intermediate positions: Grip, rotate, lift, transfer, and place

**Linear gantry**
Actuating multiple intermediate positions on a single axis: Grip, rotate, lift, transfer, and place

**Area gantry**
Approach of positions in three-dimensional space: Grip, rotate, lift, transfer, and place

Polígono Indutrial O Rebullón s/n. 36416 - Mos - España - rodavigo@rodavigo.com

RODAVIGO, S.A.
RODAMIENTOS VIGO, S.A.
www.rodavigo.net
+34 986 288118
Servicio de Att. al Cliente



# Gripping – mechanical gripping, vacuum gripping, gripping based on the Bernoulli principle

**Gripping**
Automation technology offers three established methods for different gripping tasks: mechanical, vacuum or non-contact gripping. With our extensive product range, you can implement the perfect system for your application.

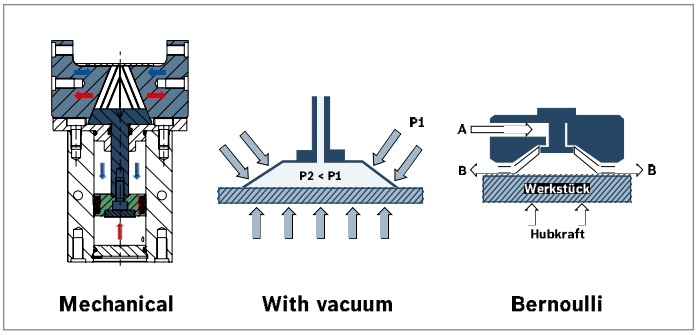

**Mechanical gripping, GSP series**
Each version of the GSP gripper series includes three to ten sizes to cover almost all requirements for standard applications. They provide strong gripping forces with compact dimensions. High precision and reliable operation are guaranteed thanks to accurate and sturdy guiding of the gripper jaws.

**Parallel grippers, GSP-P and GSP-Z series**
On parallel grippers, the power transmission from the working piston to the clamping jaws is done via a special angular kinematics, which ensures absolutely synchronous movement of the gripper jaws. A mechanical gripping safety prevents the jaws from opening during an emergency-off. On GSP-Z centric grippers, the synchronous motion of the three gripper jaws provides extra gripping force, safety, and precision.

**Radial grippers, GSP-R series**
Radial grippers provide opening angles up to 180° and their special jaw design and cam disk mechanism allow them to achieve an optimum gripping moment and closing speed.

**Angular grippers, GSP-A series**
Angular grippers are optimally designed for applications requiring opening angles up to 40°. A gear converts the piston movement into rotary motion.

Polígono Indutrial O Rebullón s/n. 36416 - Mos - España - rodavigo@rodavigo.com

RODAVIGO, S.A.
RODAMIENTOS VIGO, S.A.
www.rodavigo.net
+34 986 288118
Servicio de Att. al Cliente

**Vacuum gripping: suction grippers, ejectors, accessories**
Suction gripper systems in all required sizes and materials, a large spectrum of powerful ejectors and specific accessories – our wide variety of single components enables the fast implementation of individual handling solutions with comparatively low planning and assembly expenses. All tailored to the specific requirements of your application.

**Non-contact gripping: NCT-AL and NCT-PK**
The NCT operates by the Bernoulli principle and opens up completely new perspectives for small handling. NCT can lift and transfer hard-to-grasp objects or highly sensitive workpieces without touching the surface of the item. This guarantees ultra gentle handling. NCT is available in aluminum as well as a polyetheretherketone (PEEK) version specially designed for food and silicon applications.

| | **GSP**<br>Graduated gripper program for all standard applications, various gripper designs in many sizes | **Vacuum**<br>Suction cups, flat-type and bellows-type suction cups, vacuum generators, vacuum check valves, mounting elements, sensors, and accessories | **NCT**<br>NCT transport unit in five sizes: Ø 20, 30, 40, 60 and 100 mm, M5 air connection in the center and on the side, workpiece mass up to 4.6 kg |
|---|---|---|---|
| **Vacuum/gripping force** | 13 to 440 N | 0.03 to 2580 N | 0.2 to 46 N |
| **Workpiece form** | Cuboid, cylindrical | Flat, cuboid | Flat |
| **Material type** | Porous, sealed, strong | Sealed, slightly porous, strong | Porous, sealed, strong, fragile |
| **Workpiece surface** | Normal, smooth, structured | Sensitive, normal, smooth, slightly structured | Sensitive, smooth, structured |
| **Applications** | General assembly technology, electrical components, packaging | Sheet metal, semiconductors, packaging material, wood frames | Circuit boards, semiconductors, foils, fabrics, glass, paper |
| **Repeatability** | < 0.01 mm | < 0.1 mm | < 0.1 mm |

Polígono Indutrial O Rebullón s/n. 36416 - Mos - España - rodavigo@rodavigo.com

RODAVIGO, S.A.
RODAMIENTOS VIGO, S.A.
www.rodavigo.net
+34 986 288118
Servicio de Att. al Cliente



# Rotary motion – RCM, RAN, RAK rotary actuators

**Rotating**
With a wide range of rotary actuator concepts, we can provide the right components for all types of rotary movements in handling systems. From simple rotary modules with vane cell drives, to our universal rotary actuator with index table for direct mounting of mechanical grippers.

RCM

**RCM rotary actuator**
The RCM series rotary actuators offer high power in a small package with a wide variety of designs. They can be used to perform nearly all rotary and swivel movements. Thanks to the play-free drive of the index table, they guarantee high repetitive precision. The modules can be directly mounted on other linear axes and combined with mechanical grippers.

**RCM – rotary actuator with pinion/rack combination**
Special kinematics and a large product portfolio with specific functions and equipment details result in optimum flexibility. Functions such as pneumatic infinitely adjustable intermediate positions, an integrated elastic or hydraulic shock absorber and metallic stops at the end positions enable maximum precision and flexible adjustment options.

- High drive torque with minimum volume
- Extremely high radial load and torque absorption of the index table
- Shock absorber exchange without having to readjust the rotary angle

This series enables continuous movements and the approach of up to three positions.

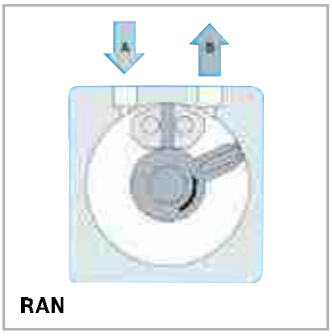

RAN

◀ **RAN**
Compact design, rotation without conversion mechanism

**RAN and RAK – rotary actuators with vane cell technology**
The simple structure with direct conversion of pneumatic pressure in rotary motion enables an extremely compact construction. For rotation angles up to 270°. The RAK series rotary actuators are equipped with an integrated rotation angle setting.

Polígono Indutrial O Rebullón s/n. 36416 - Mos - España - rodavigo@rodavigo.com

RODAVIGO, S.A.
RODAMIENTOS VIGO, S.A.
www.rodavigo.net
+34 986 288118
Servicio de Att. al Cliente

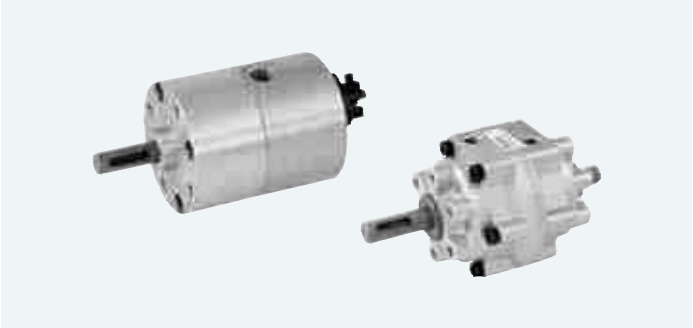

**RAN rotary actuator**
This versatile rotary actuator offers high torques with a low weight and leakage. With a simple, highly compact design, it can be easily integrated in any machine environment and provides a cost-effective alternative for numerous rotary applications. The product series also includes units with preassembled, compact sensor housing.

**RAK rotary actuator**
The RAK series rotary actuators are available in two basic versions for rotation angles ranging from 30 to 270°. They are equipped with exterior limit settings for the angle of rotation or with integrated rotation angle setting. Additional options include external sensors for position monitoring or external hydraulic shock absorbers. Extensive mounting accessories enable flexible assembly.

| | **RCM**<br>Precise automation applications; integrated functions with compact design, Easy-2-Combine interface | **RAN**<br>Numerous uses in drive assembly, low weight, economical rotary drive | **RAK**<br>Versatile rotary drive, integrated rotation angle setting, variety of assembly options |
|---|---|---|---|
| **Torque** | 0.17 to 6.5 Nm | 0.16 to 7.1 Nm | 0.15 to 41.5 Nm |
| **Rotational angle** | 90°/180° | 90°/180°/270° | 90°/180°/270° |
| **Bearing type** | Ball bearings | Slide bearings | Slide bearings |
| **Cushioning/ angle adjustment** | Elastic, hydraulic/ integrated angle adjustment | Elastic/ externally by customer | Elastic, hydraulic/ integrated angle adjustment |
| **Repeatability** | 0.2° | 3.0° | 3.0°/4.0° |
| **Sizes** | 6, 8, 12, 16, 20 | 1, 3, 8, 20, 50 | 4, 5, 6, 8, 10, 12, 17, 25 |

Polígono Indutrial O Rebullón s/n. 36416 - Mos - España - rodavigo@rodavigo.com

RODAVIGO, S.A.
RODAMIENTOS VIGO, S.A.
www.rodavigo.net
+34 986 288118
Servicio de Att. al Cliente



# Linear movements – short strokes with MSC, ZSC, MSN

**Driving**
We offer a wide range of linear drives to accomplish numerous linear motion tasks in automation technology. Drives for all directions, for both short and long strokes, and with specific functions and properties.

**MSC mini slide**

**Dynamic and precise – the entire spectrum from mini slides to cylinders for long strokes**
Rodless cylinders and slide units ensure precise guiding in handling systems. Depending on the application and required work profile, the spectrum covers everything from highly compact guide cylinders to rodless cylinders and guided shuttle units for long strokes.

MSC series mini slides are equipped with an optimized guide and end cushioning system and provide maximum rigidity for high torques and load capacities. The high-strength, rigid guide system is the basis for the MSC mini slide. Numerous clever details make the MSC a real multi-talent. Air supply options from three sides ensure extreme flexibility when installing the system and variable stroke positioning allows different strokes for individual sizes. This permits an optimal adjustment of the guide capacity within a size, among other features.

- Stroke limitation with variable stops
- Extend stroke setting either on the right or left
- Return stroke setting positioned in the center
- Shock absorber exchange without having to readjust the stroke

**MSC**

**RTC**

◀ **RCT**
With oval piston

▶ **MSC**
Stroke limitation with variable stops

**MSC**

Polígono Indutrial O Rebullón s/n. 36416 - Mos - España - rodavigo@rodavigo.com

RODAVIGO, S.A.
RODAMIENTOS VIGO, S.A.
www.rodavigo.net
+34 986 288118
Servicio de Att. al Cliente



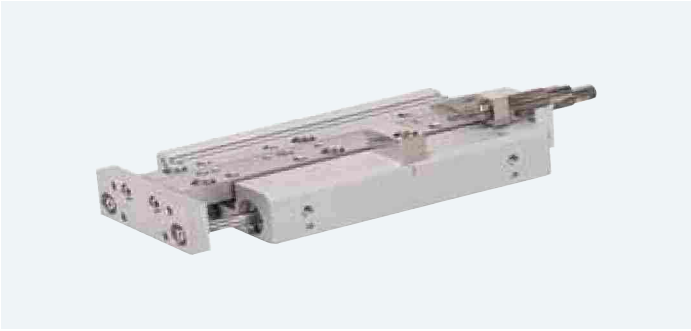

**ZSC mini slides**
The ZSC series is predestined for vertical applications. An extremely smooth-running double piston system with ball bearing circulating guide provides for high forces, despite its flat design. A stroke limitation with integrated external shock absorber is also available.

**MSN mini slides**
The series MSN mini slides offer a precise guide without play and with slim dimensions. Thanks to an especially wide variety of mounting and air supply options, they can be used in almost all positions and locations.

| | **MSC**<br>High moment load, integrated cushioning system, various ventilation options, direct mounting, Easy-2-Combine interface | **ZSC**<br>Optional stroke limitation, powerful drive, flat design | **MSN**<br>Slim design, various ventilation options, direct mounting, integrated sensor slots, precise, play-free short-stroke movements |
|---|---|---|---|
| **Sizes** | Ø 8 to 25 mm | Ø 6 to 25 mm | Ø 6 to 16 mm |
| **Stroke length** | 10 to 200 mm | 10 to 100 mm | 5 to 30 mm |
| **Guide** | Cage/ball bearing circ. guide | Ball bearing circ. guide | Cage bearing guide |
| **Cushioning/ stroke setting** | Elastic/hydraulic integrated | Elastic/hydraulic integrated | Elastic/ externally by customer |
| **Repeatability** | 0.02 mm | 0.05 mm | – |
| **Typical use** | Universal | Z-axis | Universal |

Polígono Indutrial O Rebullón s/n. 36416 - Mos - España - rodavigo@rodavigo.com

RODAVIGO, S.A.
RODAMIENTOS VIGO, S.A.
www.rodavigo.net
+34 986 288118
Servicio de Att. al Cliente



# Linear movements – short strokes with GPC, TWC

**GPC precision cylinder**
GPC series guided precision cylinders set themselves apart with high side load capacities and torsion protection. Two parallel ball bushing guides ensure exceptionally smooth, precise running. With their low dead weight and extremely compact design, GPC cylinder variants are the ideal choice for vertical movements.

**Special versions: GPC-TL, GPC-E, GPC-ST**
GPC is available in several special versions. The GPC-TL is equipped with an extra mounting surface; the GPC-ST can be mounted on both sides at end plates and makes an ideal pneumatic slide table.
The GPC-E is equipped with an infinitely adjustable stroke and hydraulic cushioning. It can achieve extremely high cycle times with excellent repeatability while boasting a compact design and low height.

**Double piston cylinder TWC**
Double pistons provide the TWC with enormous power. They also ensure torsion protection and increase the load capacity of the cylinder. Long slide bearing guide bushings result in minimum piston rod play. A special feature is the optional piston rod catch that is interlocked both when extended and retracted.

| | **GPC**<br>Drive & guide, robust and precise, high torque and transverse force absorption |
|---|---|
| **Sizes** | Ø 10 to 100 mm |
| **Stroke length** | 10 to 200 mm |
| **Guide** | Slide/ball bearing |
| **Cushioning/ stroke setting** | Elastic, hydraulic, externally by customer |
| **Typical use** | Fixed stop, robust, cost-effective, pick & place |

Polígono Indutrial O Rebullón s/n. 36416 - Mos - España - rodavigo@rodavigo.com

RODAVIGO, S.A.
RODAMIENTOS VIGO, S.A.
www.rodavigo.net
+34 986 288118
Servicio de Att. al Cliente



# Linear movements – long strokes with GSU, RTC, CKP

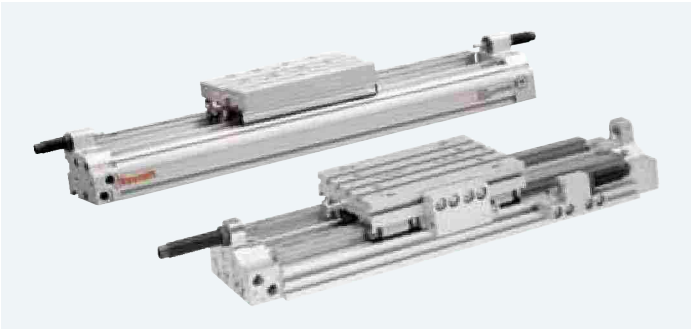

**Guided shuttle unit GSU**
This GSU shuttle unit forms a solid basis for a large number of handling applications. Stroke length and position can be set variably over the entire length of the shuttle unit – individually from both sides, further underlining the enormous flexibility of the GSU for installation. Other extraordinary integration options include a very low height and the possibility to install the air supply and exhaust on one side.

**Rodless RTC and CKP cylinders**
The compact form and unique characteristics of the RTC and CKP series open up a variety of application options. The RTC series offers three versions, for heavy loads, high-precision movement and positioning, and a wide range of speeds. Compared with a round piston, the oval piston can withstand higher loads and torques. A high load capacity and smaller cylinder dimensions ensure a compact machine design.

| | **TWC**<br>Double piston power in half the space, optional lock of the stroke end position | **GSU**<br>Rodless drive, single-side ventilation possible, Easy-2-Combine interface | **RTC**<br>Compact design, variable cushioning and guide systems, Easy-2-Combine interface | **CKP**<br>Equipped with double guide for especially high loads, Easy-2-Combine interface |
|---|---|---|---|---|
| | Ø 6 to 32 mm | Ø 16 to 25 mm | Ø 16 to 63 mm | Ø 16 to 32 mm |
| | 10 to 100 mm | 200 to 1000 mm | 0 to 4300 mm | 1800 to 3500 mm |
| | Slide bearing | Ball bearing circ. guide | Ball bearing circ. guide | Ball bearing circ. guide |
| | Elastic, fine adjustment of the end position | Hydraulic, integrated | Pneumatic, hydraulic, also side | Pneumatic, hydraulic, also side |
| | High forces, compact design | Compact for medium strokes | High forces, high rigidity | Symmetrical torque absorption |

Polígono Indutrial O Rebullón s/n. 36416 - Mos - España - rodavigo@rodavigo.com

RODAVIGO, S.A.
RODAMIENTOS VIGO, S.A.
www.rodavigo.net
+34 986 288118
Servicio de Att. al Cliente



# From single valves to valve systems – LS04 and AV03: maximum flow, minimum space

**Controlling**
For pneumatic controls in small handling, we use highly compact, lightweight single valves and modular valve systems. These high-performance components can be placed right next to the actuators.

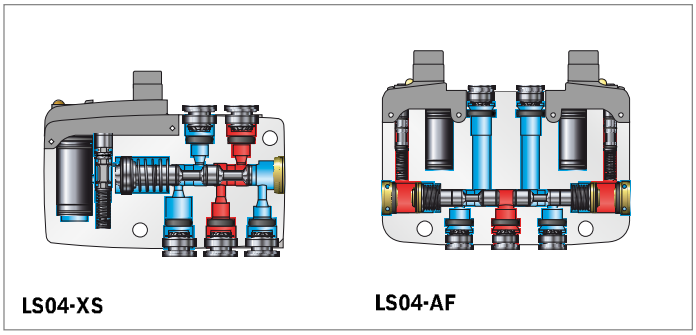


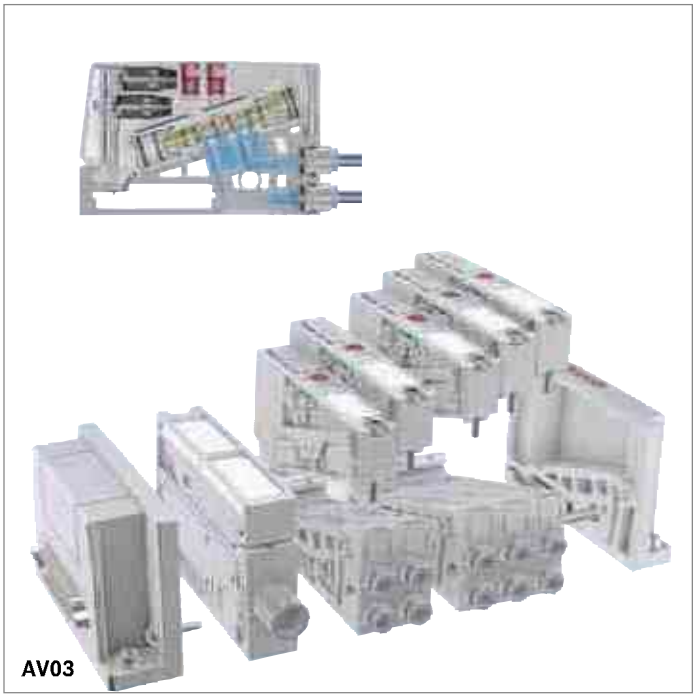


**Single valves LS04 XS, LS04 AF**
LS04 series single valves feature a slim width of only 10 mm and high power in a small package. The XS and AF variants are available in modern and innovative polymer versions. The LS04-XS is “extra small”, weighing in at only 30 g. The LS04-AF “all functions” standard single valve features an even larger flow and all standard valve functions. With their compact, lightweight design, the single valves can be mounted directly on moving parts, fulfilling demands for smaller masses and shorter response times in handling technology.

**Pneumatic control no bigger than a credit card**
With its innovative features, the AV03 valve system is ideal for small handling. The AV03 can implement all valve functions, is extremely small, lightweight and offers a very high flow of 300 std l/min in a small package. The consistently modular base plate concept ensures the highest flexibility for your configuration. Double and triple base plates can be combined, and push-in fittings configured as needed. Both tailor-made valve system configurations and highly compact machine designs are possible. The AV03 valve system also offers a unique assembly concept using hooks for easy valve mounting and exchange with just a single screw.

Polígono Indutrial O Rebullón s/n. 36416 - Mos - España - rodavigo@rodavigo.com

RODAVIGO, S.A.
RODAMIENTOS VIGO, S.A.
www.rodavigo.net
+34 986 288118
Servicio de Att. al Cliente



# The new benchmark in valve technology – AV03 valve system: small, lightweight, efficient

**AV03 valve system**
With its new diagonal design, the AV03 packs a lot of valve in a small space. High-performance polymers and smaller components enable even greater efficiency.

- Minimum space required for the base plate concept
- Integrated fieldbus solution and diverse I/O modules
- Highly modular design

The AV03 is so small and light that it can also be mounted as a valve system on moving axes. Short tubing lengths save compressed air and increase dynamics. Optimized compressed air channels ensure minimal pressure loss in the system, which allows the same cylinder force to be achieved with less supply pressure – optimum energy efficiency guaranteed. The AV03 also offers the whole range of electric connection options and innovative I/O modules.

| | **LS04 XS**<br>Maintenance-free compact valve for flows up to 200 std l/min. 5/2-way valve. Suitable for operation with lubricated or non-lubricated compressed air. | **LS04 AF**<br>Standard single valve. Provides a nominal flow of 330 std l/min. All functions available as 5/2, 5/3 and double 3/2-way valve versions. | **AV03**<br>Extremely compact modular valve system. High flows in the tightest of spaces. All valve functions and connection options. |
|---|---|---|---|
| **Weight** | 30 g | 54 g | Depending on expansion stage |
| **Nominal flow** | 200 std l/min | 300 std l/min | 300 std l/min |
| **Protection class** | IP65 (M8) | IP65 (M8) | IP65 (M8) |
| **Electrical connection** | M8, 2-pin industrial push-in fitting | M8, 2-pin industrial push-in fitting | D-Sub + fieldbus |

Polígono Indutrial O Rebullón s/n. 36416 - Mos - España - rodavigo@rodavigo.com

RODAVIGO, S.A.
RODAMIENTOS VIGO, S.A.
www.rodavigo.net
+34 986 288118
Servicio de Att. al Cliente



# X, Y, Z – the basis for all standard combinations

**All-round perfect fit: Easy-2-Combine**
Modularity and easy mounting of the single components are of special importance, particularly in standardized applications. A high level of flexibility for adaptations, modifications, and upgrades is also essential. The Easy-2-Combine philosophy is to provide the perfect, well-matched products for linear and rotary movements, as well as gripper functions. Intelligent, technically sophisticated, and of top quality. Our standard mechanical interface Easy-2-Combine has been implemented in both pneumatic and electrical components, and provides cross-technology expertise from a single source.

- Standardized interfaces with uniform mounting dimensions and thread/centering sleeve sizes
- Interlocking, force-fit connection without extra components
- High-load, precise guides

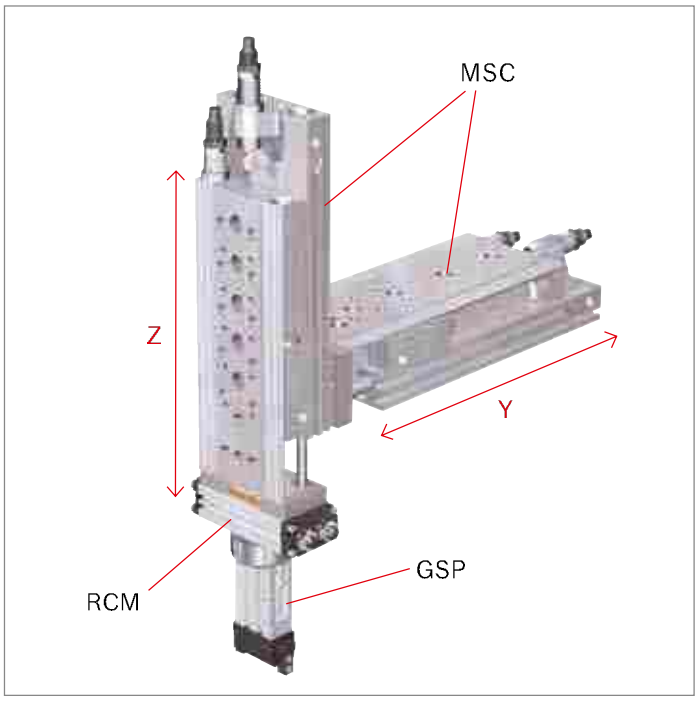


| Optimal for the axes | | ↺ | Z | Y | X |
|---|---|---|---|---|---|
| RCM | | ● | | | |
| MSC | | | ● | ● | ● |
| ZCS | | | ● | | |
| GPC-E | | | ● | ● | |
| GPC-ST | | | | ● | ● |
| GSU | | | | ● | ● |
| RTC | | | | ● | ● |
| CKP | | | | ● | ● |

● **Can be directly combined with the Easy-2-Combine interface**

**Pick & place**

**For applications with**

- Short cycle times
- Low workpiece weights
- Short strokes

**Features:**

- Direct combination of the guide units/shuttle units
- Capable of two intermediate positions by “piggy-back” assembly
- Max. stroke length of 200 mm per axis
- End position accuracy of 0.02 mm

Polígono Indutrial O Rebullón s/n. 36416 - Mos - España - rodavigo@rodavigo.com

RODAVIGO, S.A.
RODAMIENTOS VIGO, S.A.
www.rodavigo.net
+34 986 288118
Servicio de Att. al Cliente



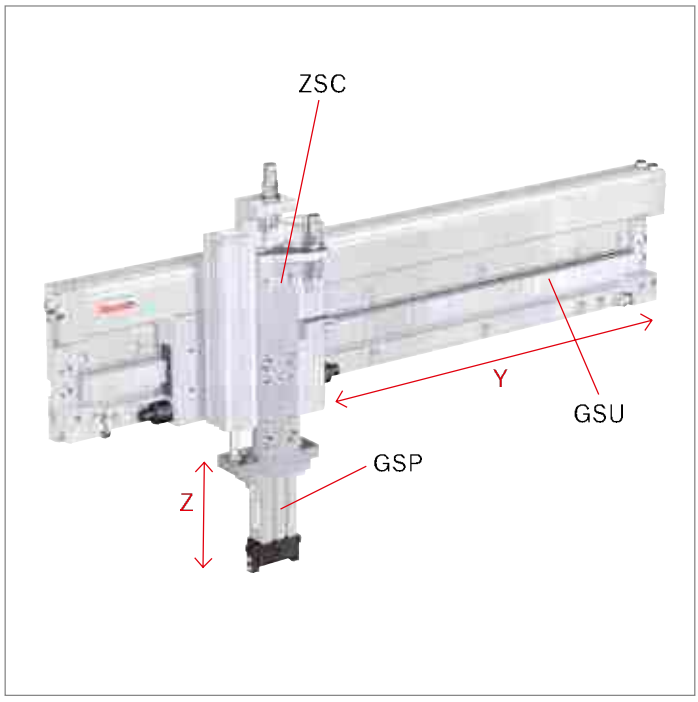


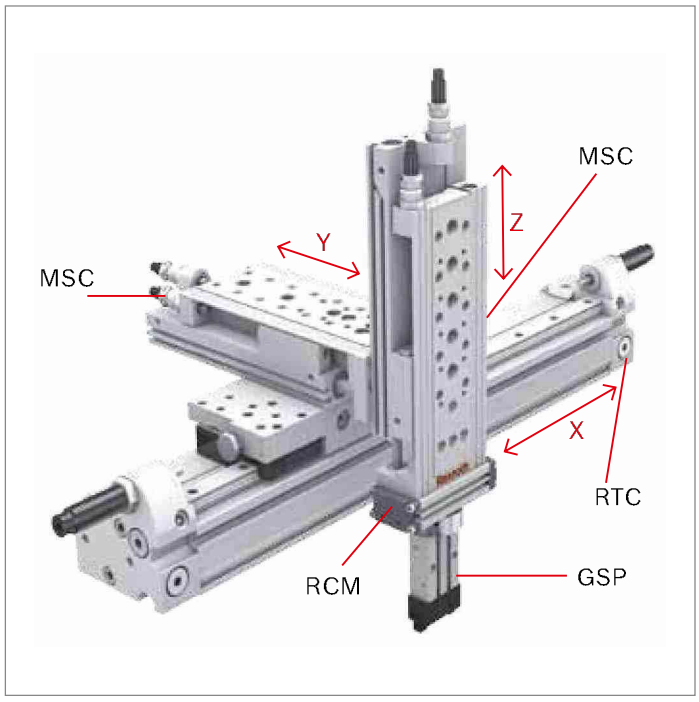


**Linear gantry**

**For applications with**

- Long strokes in Y-direction
- Varied combination of different modules for Z-direction
- Control of multiple, freely selectable intermediate positions in Y-direction through intermediate stops

**Features:**

- Direct assembly between linear axes and guide units/mini slides via versatile profile slot system and standardized interfaces
- Stroke length in Y-direction up to 1000 mm
- Repeatability up to 0.01 mm

**Area gantry**

**For applications with**

- Approach of positions in three-dimensional space
- Z-movement, e.g. via mini slides

**Features:**

- Stroke ranges in X-direction up to 5500 mm, Y-direction up to 1000 mm, Z-direction up to 200 mm
- Precise, interlocking connection through the standardized Easy-2-Combine interface

Polígono Indutrial O Rebullón s/n. 36416 - Mos - España - rodavigo@rodavigo.com

RODAVIGO, S.A.
RODAMIENTOS VIGO, S.A.
www.rodavigo.net
+34 986 288118
Servicio de Att. al Cliente



# Calculate, configure, optimize – reaching your goals, step by step

We are literal about "Easy-2-Combine": our customers should have it easy. From the very start. Easy configuration options and assembly, as well as an unparalleled range of engineering tools do more to help you find the perfect handling solution.

**Anytime and free of charge: professional engineering with proven online tools**

It's good to know that both innovative and proven software is available to take on major tasks in the planning phase. Our product calculation system for the configuration of Rexroth components is a mainstay among our free-of-charge online tools. It guides you to your individual configuration using a series of logical queries. What's more, it not only calculates the basic configuration, but also offers important tips on alternate combinations and practical accessories. Of course, engineering tools are only one form of support and should not replace a personal consultation. Take advantage of both: test our tools and contact us!

- Calculation and conversion tools
- Product configurators for a complete unit, including accessories and comprehensive technical documentation
- D&C Scheme Editor with air consumption calculator

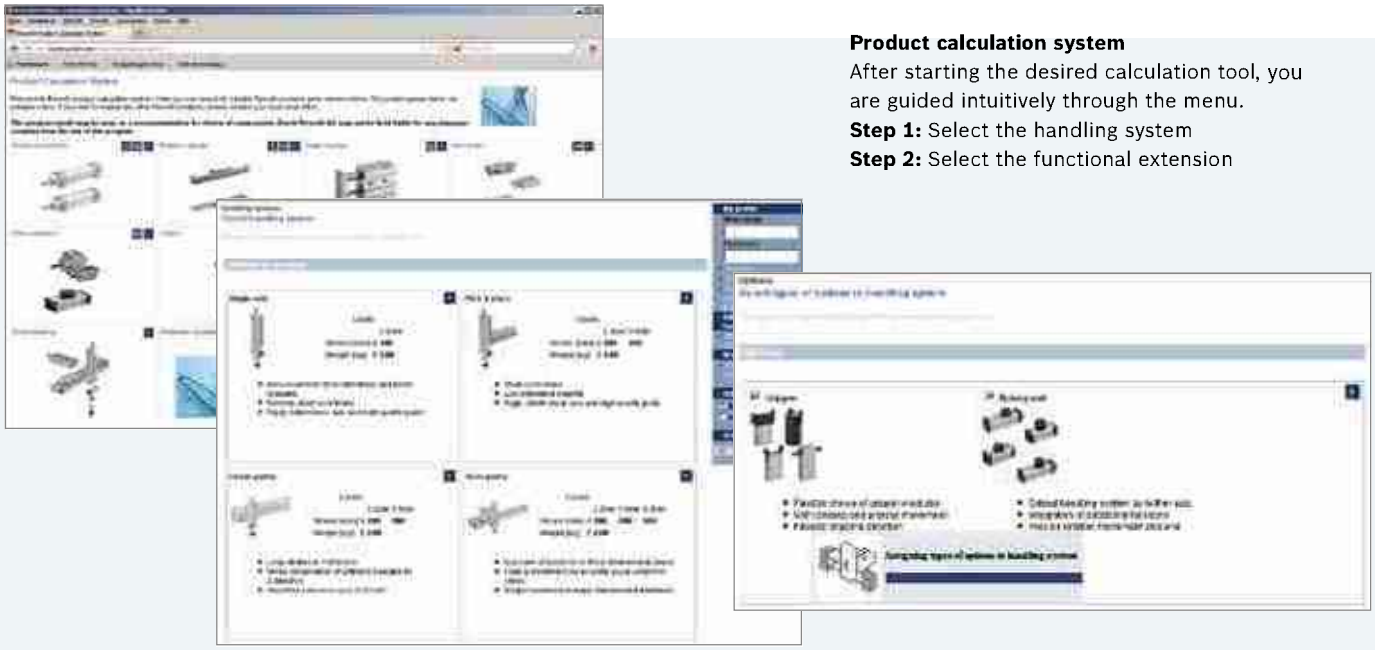

**Product calculation system**
After starting the desired calculation tool, you are guided intuitively through the menu.
**Step 1:** Select the handling system
**Step 2:** Select the functional extension

Polígono Indutrial O Rebullón s/n. 36416 - Mos - España - rodavigo@rodavigo.com

RODAVIGO, S.A.
RODAMIENTOS VIGO, S.A.
www.rodavigo.net
+34 986 288118
Servicio de Att. al Cliente

**Step 3:** Enter key data for the handling system

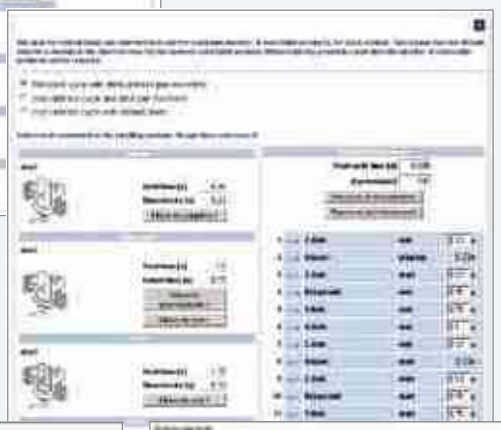

**Step 4:** Display of movement sequence with calculated travel times. Adaptations possible using individual parameters.

**Step 5:** Select the modules for the handling system and enter additional performance parameters

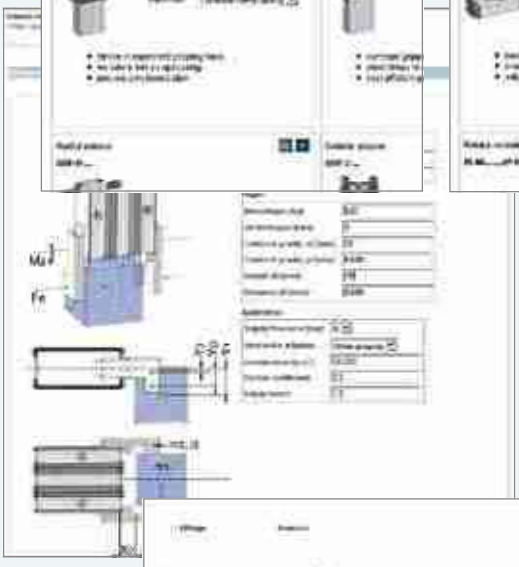

**Step 6:** Calculated configuration result with all details, project documentation, catalog pages, and CAD data

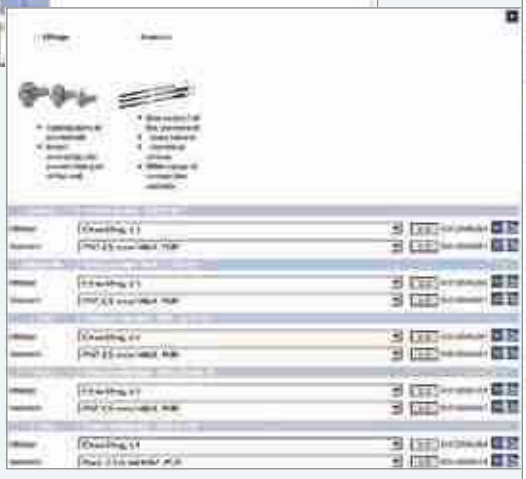

RODAVIGO, S.A.
RODAMIENTOS VIGO, S.A.
www.rodavigo.net
+34 986 288118
Servicio de Att. al Cliente



# Application-specific configured handling systems from a single source

**Take advantage of the experience of our international expert teams for your individual handling solution**
With our dedicated customer orientation and long-term strategy, we not only offer best-in-class product quality, but also exemplary consulting. Our specialists for system solutions are happy to provide assistance and configure components as ready-to-use handling solutions that are perfectly matched to your applications, while building on the function and properties of proven standard products.

- Specific assemblies
- Configured modules
- Ready-to-install systems

We configure selected Rexroth components into complete assemblies and generate modular solutions that can be precisely integrated in your automation technology. Linear guides, fully assembled modules, as well as pick & place units can be precisely adapted to your requirements.
And for one-of-a-kind applications: we specialize in tailor-made pneumatic solutions. We have extensive know-how in planning special designs and assist you well before implementation with calculations, drafts, and concepts.

- Industry-specific product innovations
- Components with needs-based add-ons
- Components and overall solutions developed as customer-specific designs

**What we call "EasyHandling"**
Rexroth's "EasyHandling" concept has made the automation of handling systems much easier, faster, and more economical for its customers.
EasyHandling reduces engineering, assembly, and commissioning times by up to 80 percent.
Drive and control technologies, standardized interfaces, and a revolutionary new commissioning assistant are all perfectly matched.

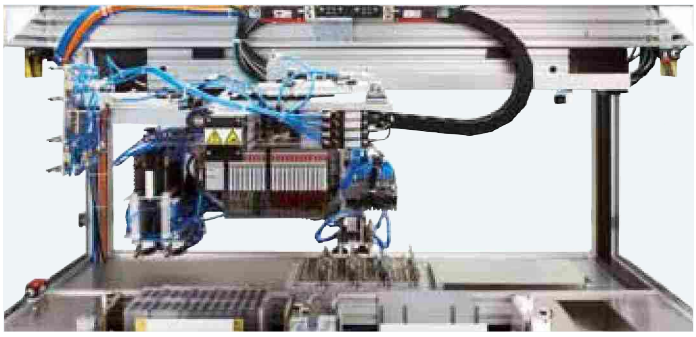

- **Area gantry, holds up to 24 SD storage cards**
- **Pick & place units as fully preassembled workstations**

Polígono Indutrial O Rebullón s/n. 36416 - Mos - España - rodavigo@rodavigo.com

RODAVIGO, S.A.
RODAMIENTOS VIGO, S.A.
www.rodavigo.net
+34 986 288118
Servicio de Att. al Cliente



# In dialog with our customers and partners

**Based on proven expertise and a first-class product portfolio**
Our understanding of cooperation goes well beyond individual projects. We are constantly in dialog with our customers and are always a competent contact for both technical and economic questions. The know-how contained in our comprehensive pneumatic product range gives us a solid foundation for our work.

- Cylinders and sensor technology
- Valves, valve terminal systems, fieldbus connections
- Gripper and vacuum technology
- Compressed air preparation, assembly material, accessories

The continuous optimization of our processes allows us to respond more quickly and gives us a head start in achieving tailor-made solutions. Thus, we always remain close to the action and ensure the technological lead for us and our customers.

**Around-the-clock information**
The Rexroth Internet Portal never sleeps. In the online catalog, you can find additional information covering the entire product range, including all technical details, as well as the use of user-friendly design tools.

- Product highlights in pneumatics
- Internet platform with online tools

**Industry-specific product range**

Polígono Indutrial O Rebullón s/n. 36416 - Mos - España - rodavigo@rodavigo.com

The Drive & Control Company

Rexroth
Bosch Group

**Bosch Rexroth AG**
Pneumatics
Ulmer Straße 4
D - 30880 Laatzen
Phone +49 511 2136-0
Fax +49 511 2136-269
sales-pneumatics@boschrexroth.de
www.boschrexroth.com/pneumatics

**Canada**
Bosch Rexroth Canada Corp.
3426 Mainway Drive
Burlington, Ontario L7M 1A8
Tel. +1 905 335-5511
Fax +1 905 335-4184

**Australia**
Bosch Rexroth Pty. Ltd.
3 Valediction Road
Kings Park NSW 2148
Sydney
Tel. +61 2 9831-7788
Fax +61 2 9831-5553

**U.S.A.**
Bosch Rexroth Corp.
1953 Mercer Road
Lexington, KY 40511-1021
Kentucky
Tel. +1 859 254-8031
Fax +1 859 254-4188

**Great Britain**
Bosch Rexroth Ltd.
Broadway Lane
South Cerney
Cirencester, GL7 5UH
Gloucestershire
Tel. +44 1285 86-3000
Fax +44 1285 86-3003

Further contacts:
www.boschrexroth.com/addresses

The data specified above only serve to describe the product. No statements concerning a certain condition or suitability for a certain application can be derived from our information. The given information does not release the user from the obligation of own judgement and verification. It must be remembered that our products are subject to a natural process of wear and aging.

R499050998/2012-09/EN Subject to change. Printed in Germany. © This document, as well as the data, specifications and other information set forth in it, are the exclusive property of Bosch Rexroth AG. It may not be reproduced or given to third parties without its consent.